GENERAL NOTES AND SPECIFICATIONS

1. ALL WORK SHALL BE IN ACCORDANCE WITH THE 2012 INTERNATIONAL BUILDING CODE.
2. FIELD VERIFY ALL RELEVANT DIMENSIONS AND CONDITIONS AT EXISTING STRUCTURES PRIOR TO STARTING SHOP DRAWINGS AND THE CONSTRUCTION PROCESS.
3. EXISTING CONDITIONS WHICH REQUIRE MODIFICATIONS TO THE DESIGN SHALL BE IMMEDIATELY BROUGHT TO THE ATTENTION OF THE ENGINEER.
4. ALL CONCRETE WORK SHALL BE IN ACCORDANCE WITH THE "BUILDING CODE REQUIREMENTS FOR REINFORCED CONCRETE (ACI 318-18? THE AMERICAN CONCRETE INSTITUTE.
5. ALL CONCRETE SHALL HAVE A COMPRESSIVE STRENGTH OF 3000 PSI AT 28 DAYS AND A MINIMUM CEMENT CONTENT OF 5 SACKS PER CUBIC YARD. SLUMP SHALL BE 3" TO 5". AGGREGATE SHALL CONFORM TO ASTM C 33. APPLY CURING COMPOUND TO ALL FLAT CONCRETE SURFACES IMMEDIATELY AFTER FINISHING.
6. ALL REINFORCING STEEL SHALL BE NEW DOMESTIC DEFORMED BILLET STEEL, CONFORMING TO ASTM A 615, GRADE 60.
7. STRUCTURAL STEEL SHALL CONFORM TO THE AISC 360 "SPECIFICATIONS FOR STRUCTURAL STEEL BUILDINGS."
8. STRUCTURAL STEEL SHAPES, PLATES ETC., TO MEET THE REQUIREMENTS OF ASTM A 36 OR ASTM A 992 (50 KSI YIELD).
9. STRUCTURAL TUBES TO BE ASTM A 500, GRADE B (46 KSI YIELD).
10. ALL WELDS TO CONFORM TO THE REQUIREMENTS OF THE SPECIFICATIONS OF THE AMERICAN WELDING SOCIETY. USE E70 ELECTRODES.
11. DRILLED EXPANSION BOLTS SHALL BE ONE OF THE FOLLOWING:

    STRONG-BOLT, SIMPSON STRONG-TIE CO., PLEASANTON, CA

    POWER STUD+SD1, POWERS FASTENERS, BREWSTER, NY

    KWIK BOLT TZ, HILTI FASTENING SYSTEMS, TULSA, OK

    HOLES DRILLED IN THE CONCRETE SHALL BE THE SAME NOMINAL DIAMETER OF THE BOLT. BOLTS SHALL BE INSTALLED PERPENDICULAR WITH A MAXIMUM DEVIATION FROM PERPENDICULAR OF 10 DEGREES. BOLT POSITIONS MAY BE ADJUSTED IN THE FIELD, A MAXIMUM OF 1 1/2" FROM THE DETAILED DIMENSION, AFTER LOCATING REBAR WITH A PACHOMETER. ALL ABANDONED HOLES SHALL BE COMPLETELY FILLED WITH GROUT.
12. ADHESIVE BOLTS AND FIELD DRILLED DOWELS AND ANCHOR RODS TO BE SET IN HARDENED CONCRETE SHALL BE ONE OF THE SYSTEMS LISTED HERE. INSTALLATION SHALL BE BY TRAINED TECHNICIANS.

    HIT/HY200 ADHESIVE ANCHORING SYSTEM, HILTI FASTENING SYSTEMS, TULSA, OK

    HIT-RE500-SD ADHESIVE ANCHORING SYSTEM, HILTI FASTENING SYSTEMS, TULSA, OK
13. ALL ABANDONED HOLES DRILLED IN THE CONCRETE SHALL BE COMPLETELY FILLED WITH NON-SHRINK GROUT.
14. ALL STEEL SHALL BE HOT-DIPPED GALVANIZED AND CONFORM TO ASTM A 123. BASEPLATE ASSEMBLIES SHALL BE DIPPED AS A UNIT AFTER WELDING THE STIFFENER PLATE.
15. TOUCHUP ANY CHIPPED OR SCRATCHED GALVANIZING AND AFTER WELDING WITH ZRC COLD GALVANIZING COMPOUND.
16. GROUT UNDER BASE PLATE SHALL CONFORM TO ASTM C 1107, GRADE B, NON-SHRINK, NON-METALLIC GROUT WITH A COMPRESSIVE STRENGTH OF 5000 PSI AT 28 DAYS.
17. APPLY SIKA ARMATEC 110 EPOCEM AS A BONDING AGENT, IMMEDIATELY PRIOR TO POURING CONCRETE. FOLLOW ALL MANUFACRTURER'S INSTALLATION INSTRUCTIONS.

DATUM
Datum Engineers Incorporated
WWW.DATUMENGINEERS.COM | CO REG. NO. F-2819
Dallas 214-358-0174 | Austin 512-469-9490 | San Antonio 210-858-2869

Datum Project No. 15217

STATE OF TEXAS
WILLIAM R. LACKNER
83774
PROFESSIONAL ENGINEER
12/22/15

ISSUE

PARK WEST SIGN FOUNDATION REPAIR

IRVING, TEXAS

SHEET

S1.0

Sheet Size: 17X22
Scale: 3/8" = 1'-0"

PORTIONS OF THIS DRAWING MAY NOT BE TO SCALE. THEREFORE, THIS DRAWING SHALL NOT BE SCALED.

Copyright © 2015, Datum Engineers INC.

NOTE TO CONTRACTOR:
FIELD VERIFY ALL EXISTING DIMENSIONS & ELEVATIONS
PRIOR TO FABRICATION OF MATERIALS AND CONSTRUCTION

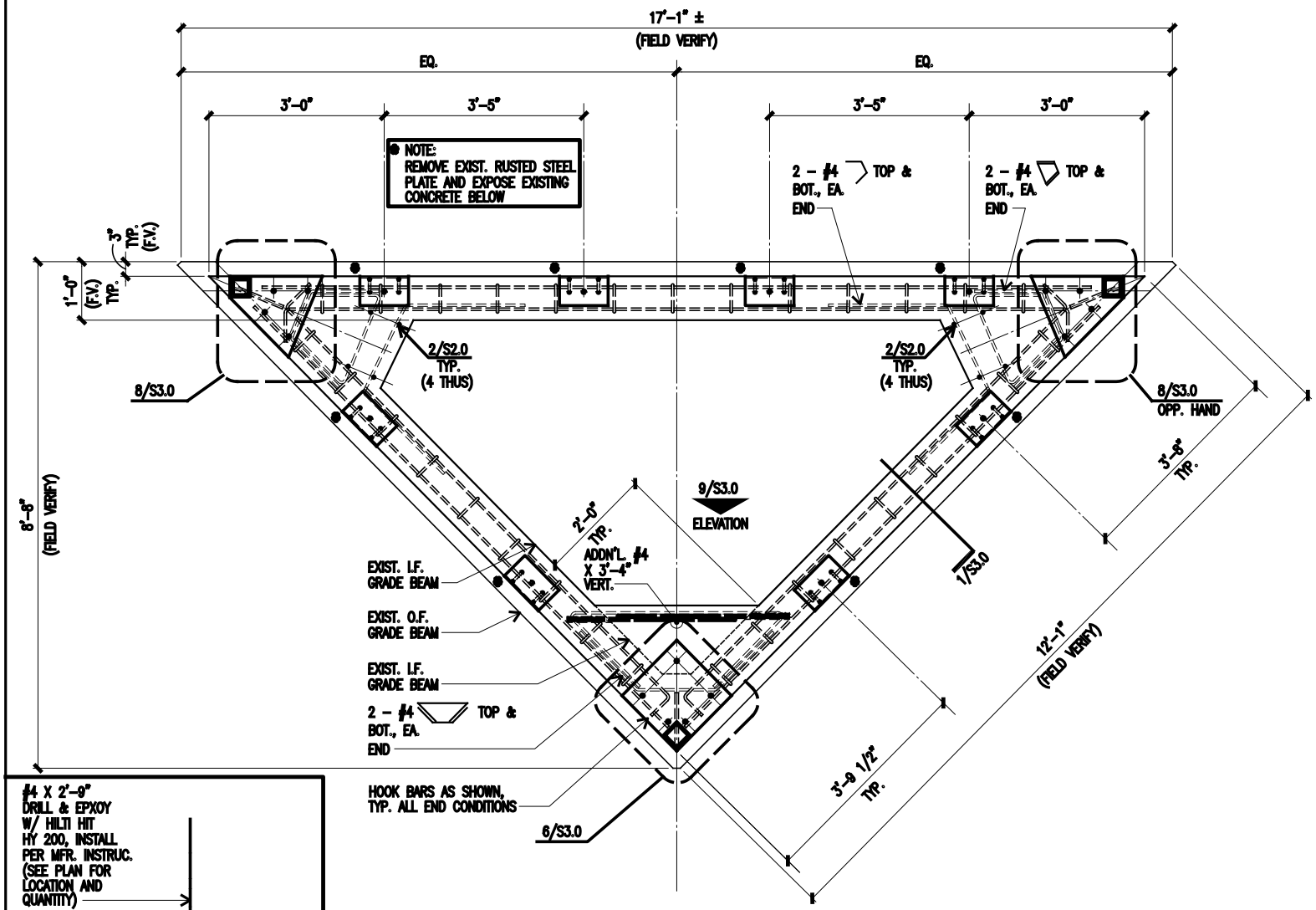

1 EXISTING SIGN - FOUNDATION FRAMING PLAN
3/4" = 1'-0"

PLAN NORTH

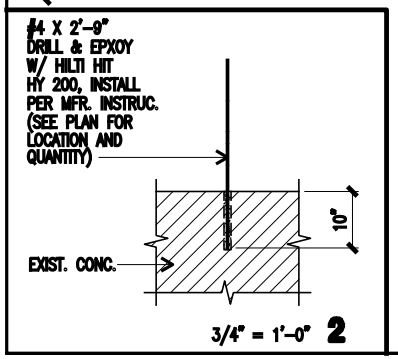

3/4" = 1'-0" **2**

Sheet Size: 17X22
Scale: 3/4" = 1'-0"

PORTIONS OF THIS DRAWING MAY NOT BE TO SCALE. THEREFORE, THIS DRAWING SHALL NOT BE SCALED.

Copyright © 2015, Datum Engineers INC.

DATUM
Datum Engineers Incorporated
WWW.DATUMENGINEERS.COM | CO REG. NO. F-2819
Dallas 214-358-0174 | Austin 512-469-9490 | San Antonio 210-858-2869

Datum Project No. 15217

STATE OF TEXAS
WILLIAM R. LACKNER
83774
PROFESSIONAL ENGINEER
12/22/15

ISSUE

PARK WEST SIGN FOUNDATION REPAIR

IRVING, TEXAS

SHEET

S2.0

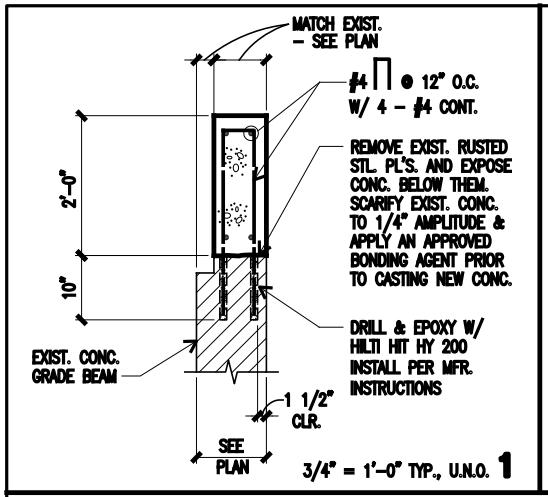

3/4" = 1'–0" TYP., U.N.O. **1**

NOTE: SEE 1/S3.0 FOR INFO. NOT SHOWN

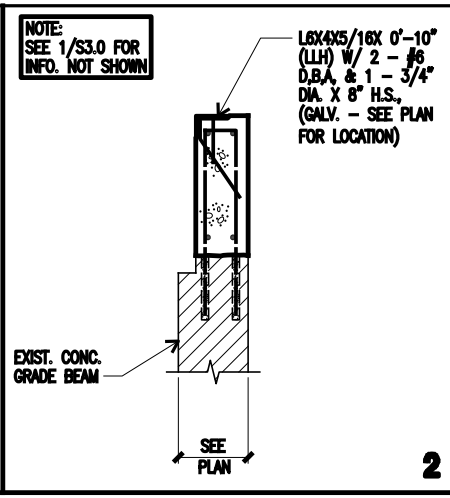

2

NOTE:
1. STEEL ASSEMBLY TO BE HOT DIPPED GALVANIZED
2. PAINT WELDS W/ ZRC COLD GALVANIZING COMPOUND

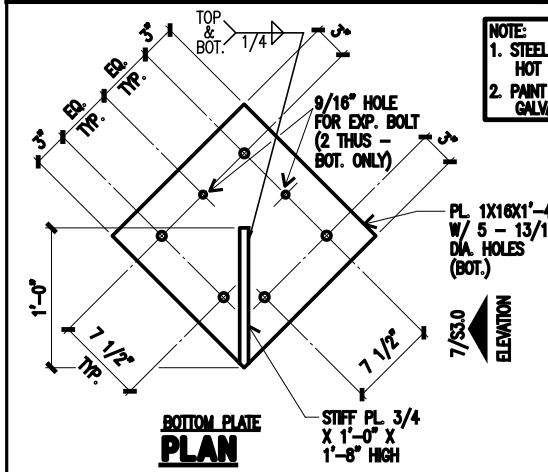

BOTTOM PLATE **PLAN**

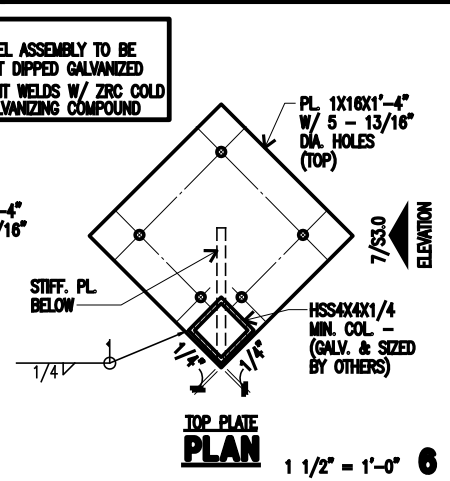

TOP PLATE **PLAN**

1 1/2" = 1'–0" **6**

NOTE: REINFORCING NOT SHOWN IN NEW CONC. FOR CLARITY

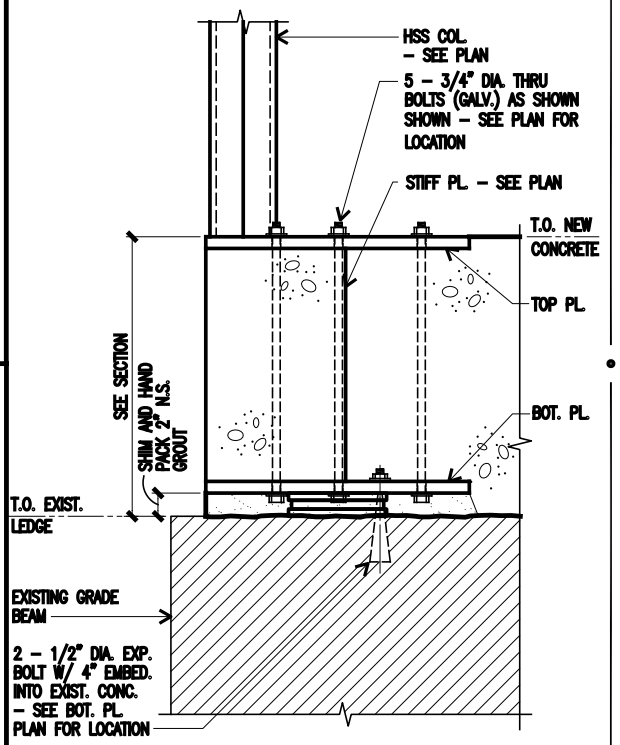

TOP & BOTTOM PLATE **ELEVATION**

1 1/2" = 1'–0" **7**

NOTE:
1. STEEL ASSEMBLY TO BE HOT DIPPED GALVANIZED
2. PAINT WELDS W/ ZRC COLD GALVANIZING COMPOUND

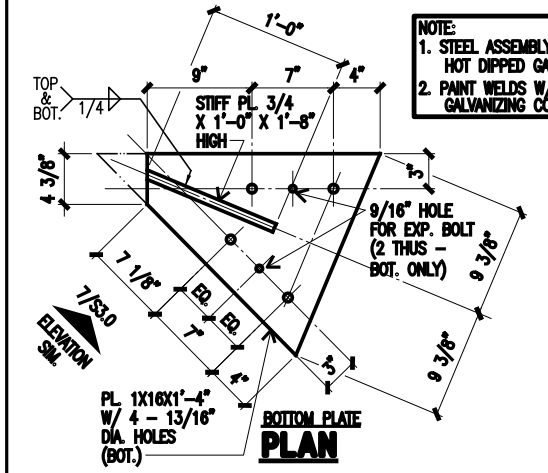

BOTTOM PLATE **PLAN**

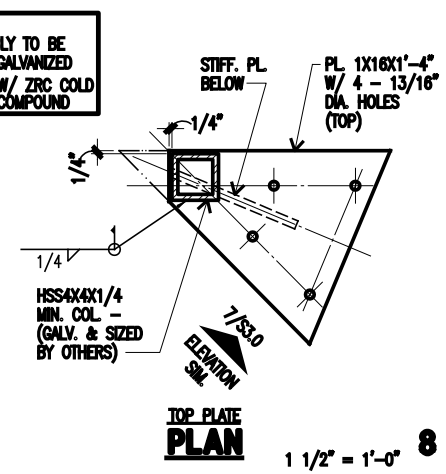

TOP PLATE **PLAN**

1 1/2" = 1'–0" **8**

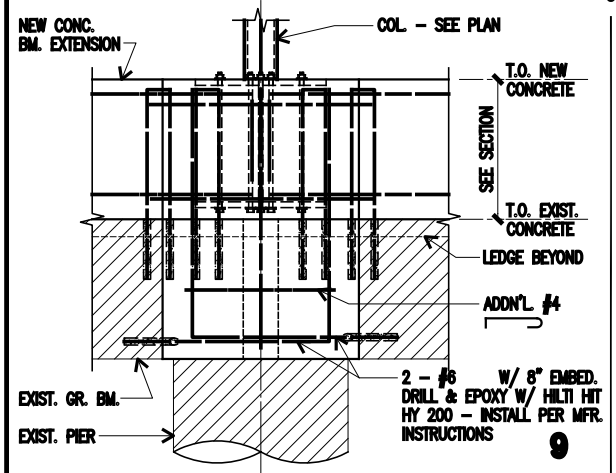

9

DATUM
Datum Engineers Incorporated
WWW.DATUMENGINEERS.COM | CO REG. NO. F-2819
Dallas 214-358-0174 | Austin 512-469-9490 | San Antonio 210-858-2869

Datum Project No. 15217

STATE OF TEXAS
WILLIAM R. LACKNER
83774
PROFESSIONAL ENGINEER
12/22/15

ISSUE

PARK WEST SIGN FOUNDATION REPAIR

IRVING, TEXAS

SHEET

S3.0

Sheet Size: 17X22
Scale: 3/4" = 1'–0"

PORTIONS OF THIS DRAWING MAY NOT BE TO SCALE. THEREFORE, THIS DRAWING SHALL NOT BE SCALED.

Copyright © 2015, Datum Engineers INC.